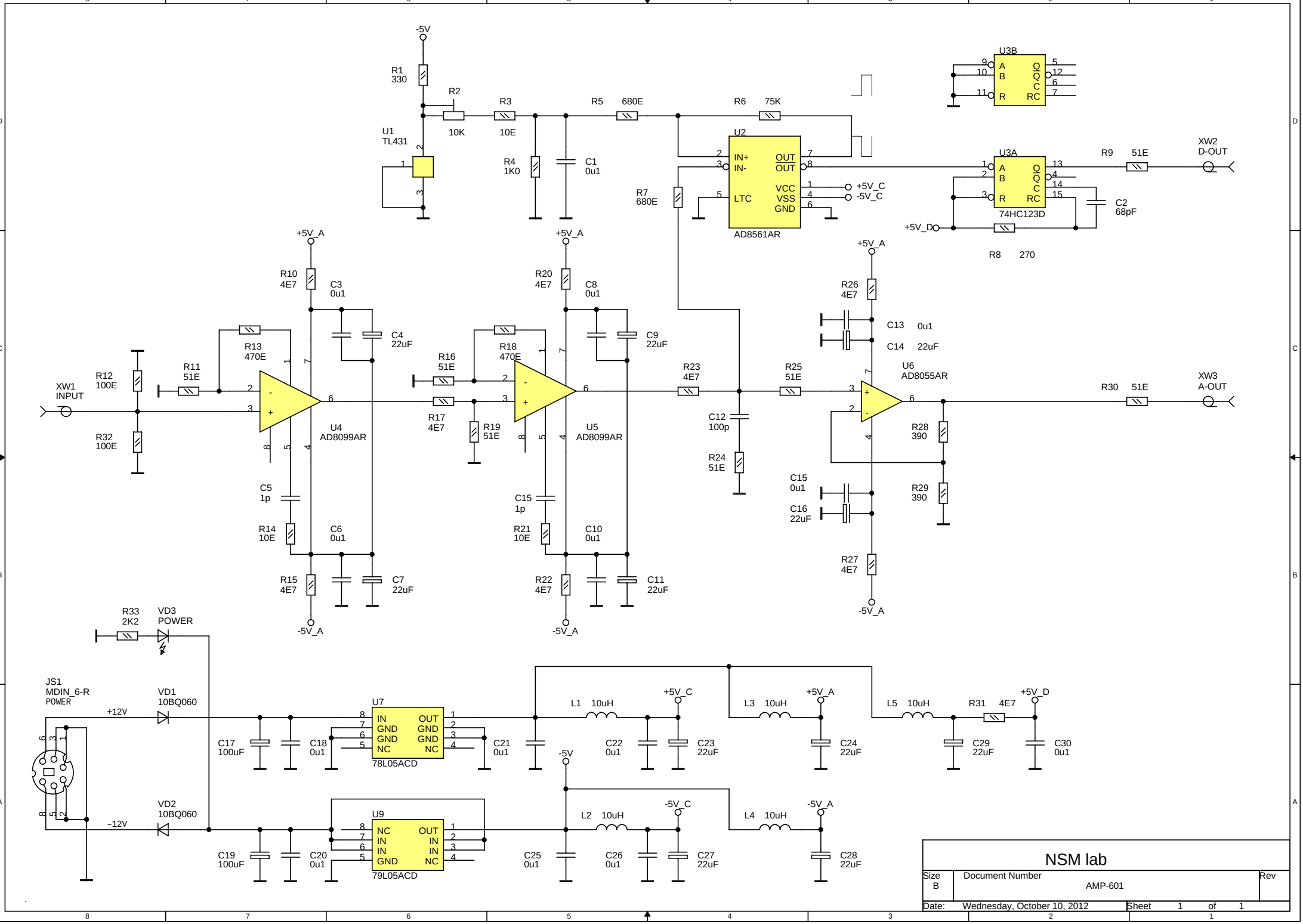
-5V
R1
330
R2
10K
R3
10E
R5
680E
R6
75K
U1
TL431
R4
1K0
C1
0u1
U2
IN+
IN-
LTC
OUT
OUT
VCC
VSS
GND
AD8561AR
R7
680E
+5V_C
-5V_C
U3B
A
B
R
Q
Q
C
RC
U3A
74HC123D
R9
51E
XW2
D-OUT
C2
68pF
+5V_D
R8
270
+5V_A
R10
4E7
C3
0u1
C4
22uF
R13
470E
R11
51E
XW1
INPUT
R12
100E
R32
100E
U4
AD8099AR
C5
1p
R14
10E
C6
0u1
R15
4E7
C7
22uF
-5V_A
R20
4E7
C8
0u1
C9
22uF
R16
51E
R18
470E
R17
4E7
R19
51E
U5
AD8099AR
C15
1p
R21
10E
C10
0u1
R22
4E7
C11
22uF
R23
4E7
C12
100p
R24
51E
R25
51E
R26
4E7
C13
0u1
C14
22uF
U6
AD8055AR
R28
390
R29
390
C15
0u1
C16
22uF
R27
4E7
R30
51E
XW3
A-OUT
R33
2K2
VD3
POWER
JS1
MDIN_6-R
POWER
+12V
VD1
10BQ060
VD2
10BQ060
-12V
U7
IN
GND
GND
NC
OUT
GND
GND
NC
78L05ACD
C17
100uF
C18
0u1
C21
0u1
L1
10uH
C22
0u1
C23
22uF
L3
10uH
C24
22uF
L5
10uH
R31
4E7
C29
22uF
C30
0u1
U9
NC
IN
IN
GND
OUT
IN
IN
NC
79L05ACD
C19
100uF
C20
0u1
C25
0u1
L2
10uH
C26
0u1
C27
22uF
-5V_C
L4
10uH
C28
22uF
NSM lab
Size
B
Document Number
AMP-601
Rev
Date:
Wednesday, October 10, 2012
Sheet
1
of
1