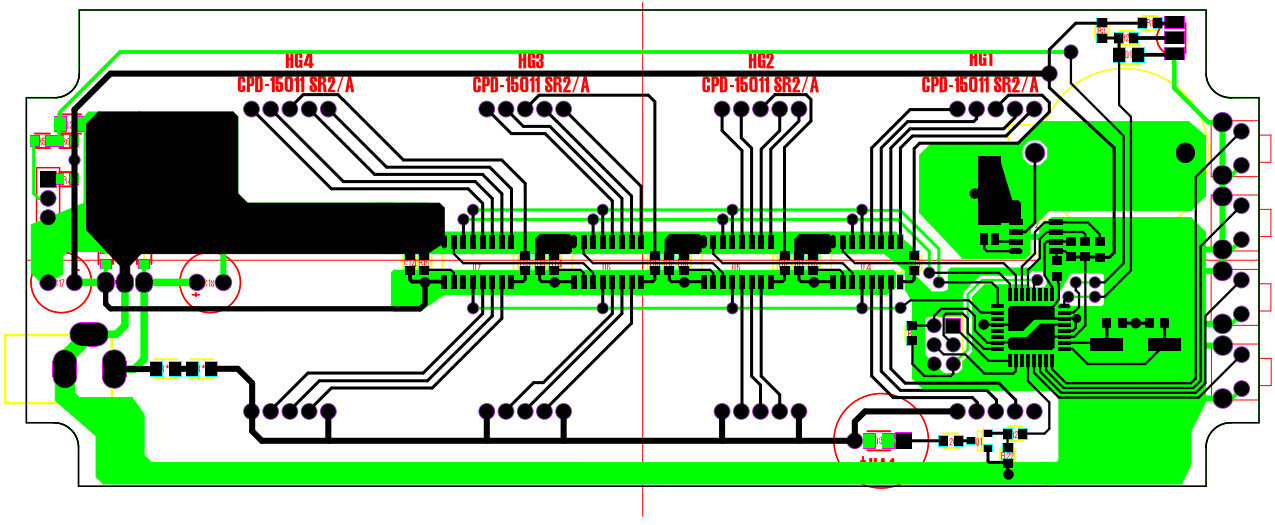
HG4
CPD-15011 SR2/A
HG3
CPD-15011 SR2/A
HG2
CPD-15011 SR2/A
HG1
CPD-15011 SR2/A